MDR-NC6

SERVICE MANUAL

Tourist Model

Ver 1.0 2004.10

SPECIFICATIONS

General

Type
Open air, dynamic
Driver units
38 mm, dome type
Power handling capacity
100mW
Impedance
20 Ω at 1 kHz (when the power is on)
65 Ω at 1 kHz (when the power is off)
Sensitivity
106 dB/mW (when the power is on)
104 dB/mW (when the power is off)
Frequency response
30 – 15,000 Hz
Frequency range of active noise attenuation
40 – 1,500 Hz, more than 10 dB at 300 Hz
Cord
1.5m (59 1/8 inches)
Plug
Gold plated L-sharped stereo mini plug
Power source
DC 1.5 V, 1 · R03 (size AAA) battery
Mass
Approx. 150 g (5.3 oz) including battery

Battery life

Battery	Approx. hours*1
Sony alkaline LR03 (size AAA)/AM4(N) battery	30 hours*2
Sony manganese R03/UM-4 (NU) (size AAA) battery	15 hours*2

*1 1 kHz, 1 mW + 1 mW input
*2 Time stated above may vary, depending on the temperature or conditions of use.

When to replace the battery

Replace the battery with a new one when the POWER indicator dims. The noise canceling feature may not work correctly if battery power is low.

Supplied accessories

Plug adaptor for in-flight use* (single/dual) (1)
Carrying case (1)
Operating Instructions (1)

* May not be compatible with some in-flight music services.
Design and specifications are subject to change without notice.

Note on chip component replacement

- Never reuse a disconnected chip componet
- Notice that the minus side of a teamtalum capacitor may be damaged by heat

NOISE CANCELING HEAD PHONES

9-879-196-01
2004J05-1
© 2004.10

Sony Corporation
Personal Audio Company
Published by Sony Engineering Corporation

SONY®

MDR-NC6

This section is extracted from instruction manual.

SECTION 1 GENERAL

Features

- Noise canceling headphones reduce ambient noise, and provide a quieter environment to enhance audio entertainment. Ambient sound is synthesized with an anti-sound signal produced by the noise canceling circuit, and reduced. (Over 10 dB is reduced at 300 Hz.)
- Slim swivel folding style for smart carrying and easy strage.
- Neodymium magnets are used to deliver powerful sound.
- Operates as passive headphones when noise canceling circuit is not activated.
- Plug adaptor is supplied to connect directly to stereo or dual jack of in-flight music services.

Installing a battery

1 Open the lid of the battery case on the right inner side of the headphone.

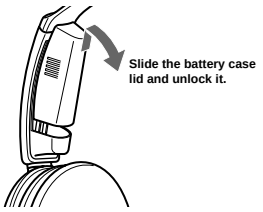

2 Insert one R03 (size AAA) battery by matching the ⊕ and ⊖ on the battery to the ⊕ and ⊖ in the battery case.

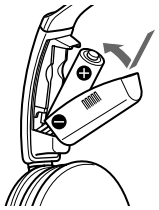

3 Close the lid.

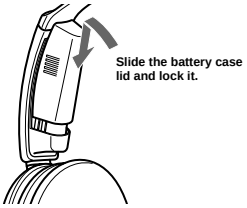

Listening to music

1 Connect the headphones to the AV equipment.

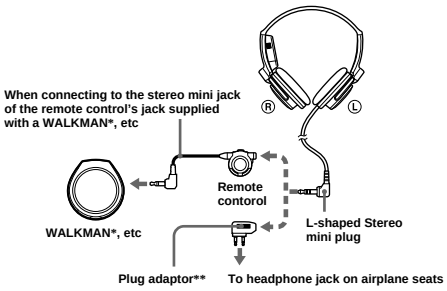

* WALKMAN is a trademark of Sony Corporation.
**May not be compatible with some in-flight music services.

2 Turn on the power of the headphones.
The POWER indicator lights in red. When the power is turned on, ambient noise is reduced, and you can listen to music more clearly at a lower volume.

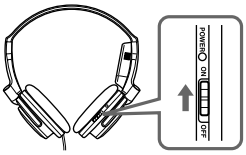

3 Put on the headphones so that the ear pads cover your ears.

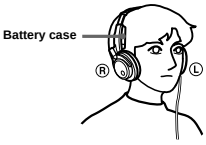

4 Turn on the power of the AV equipment.

Notes on using on the airplane

- The supplied plug adaptor can be connected to dual and stereo mini jacks.

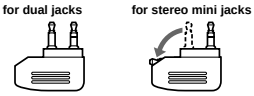

- Do not use the headphones when use of electronic equipment is prohibited or when use of personal headphones for in-flight music services is prohibited.

If you have any questions or problems concerning the system that are not covered in this manual, please consult the nearest Sony dealer.

After listening to music

Turn off the power of the headphones.

Notes

- The noise canceling function is only effective for noise in the low frequency band. Although noise is reduced, it is not canceled completely.
- Do not cover the microphone of the headphones with your hands. The noise canceling function may not work properly.
- If you cover the microphone of the headphones with your hands, howling may occur. In this case, move your hands away from the microphone.

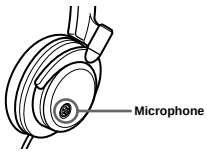

- The noise canceling effect may vary depending on how you wear the headphones.
- You can use the headphones without turning on the power. In this case, the noise canceling function is not active, and the headphones operate as passive headphones.

Folding the headphones

The driver units rotate to make them flat for easy storage in the carring case (supplied) or a seat pocket.

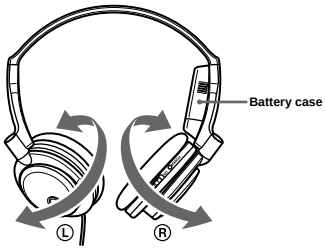

SECTION 2
DISASSEMBLY

Note: Follow the disassembly procedure in the numerical order given.

2-1. MAIN (L), (R) BOARD

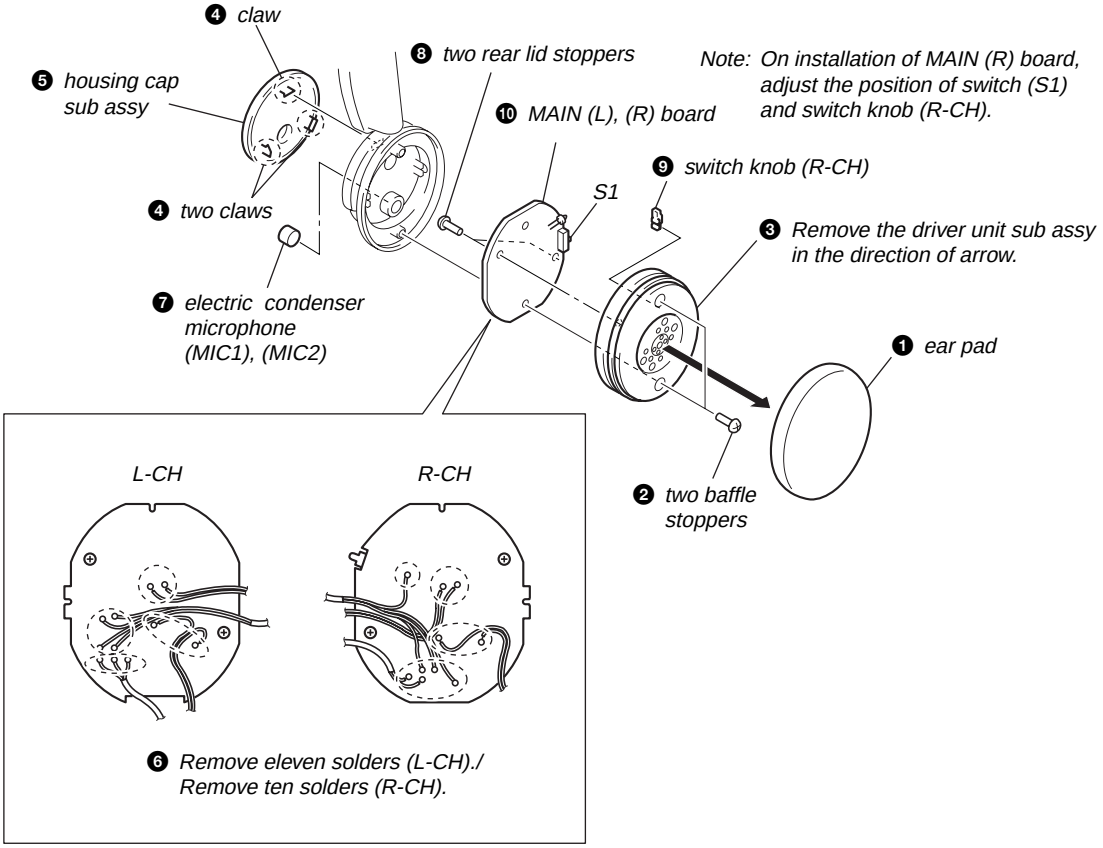

POSITION OF LEAD WIRES

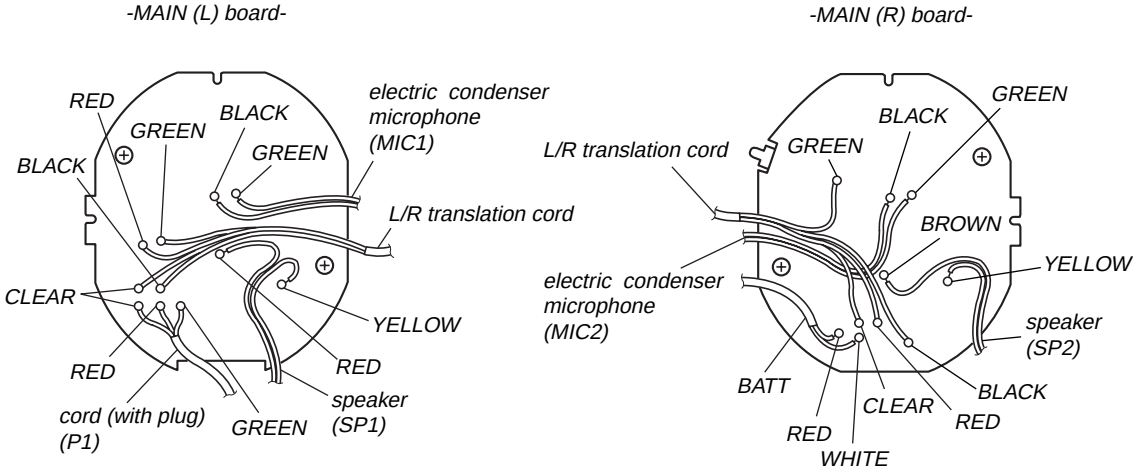

SECTION 3
ELECTRICAL ADJUSTMENT

NOISE CANCELING AMOUNT ADJUSTMENT

Preparation:

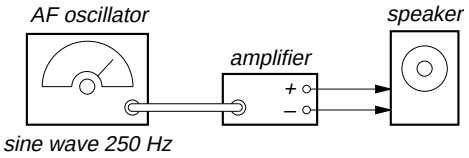

Procedure:

1. Generate a sine wave of specific frequency (250 Hz) from a AF oscillator, and output it from a speaker placed at the forward position,
2. Remove the housing cap sub assy and sheet.
3. Mount this set on the head, and turn on the POWER switch.
4. With this set mounted, rotate the SFR1 (Lch) and SFR2 (Rch) so that the volume from the speaker becomes lowest aurally. (See below figure)

Adjustment Location:

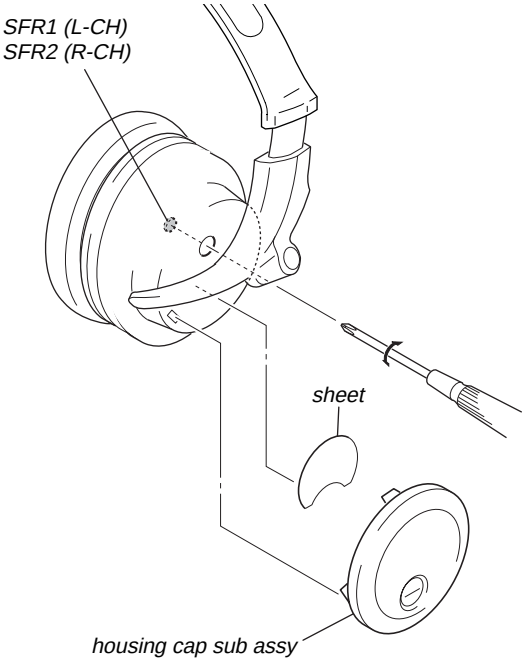

–MAIN (L) Board–

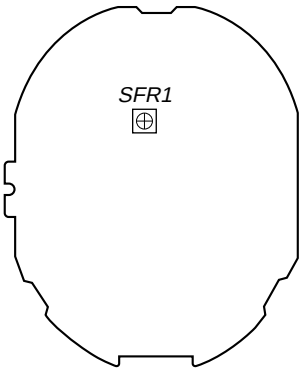

–MAIN (R) Board–

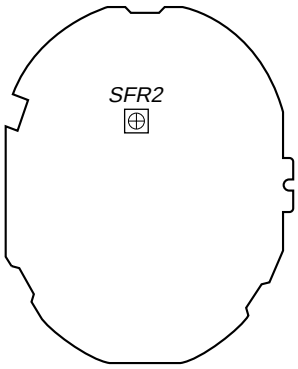

SECTION 4
DIAGRAMS

• Note for Printed Wiring Boards and Schematic Diagrams

Note on Schematic Diagram:

- All capacitors are in µF unless otherwise noted. (p: pF) 50 WV or less are not indicated except for electrolytics and tantalums.
- All resistors are in Ω and 1/4 W or less unless otherwise specified.
- ▭ : panel designation.
- ▬ : B+ Line.
- ▭ : adjustment for repair.
- Power voltage is dc 1.5 V and fed with regulated dc power supply from battery terminal.
- Voltages and waveforms are dc with respect to ground under no-signal conditions.
- Voltages are taken with a VOM (Input impedance 10 MΩ). Voltage variations may be noted due to normal production tolerances.
- Waveforms are taken with a oscilloscope. Voltage variations may be noted due to normal production tolerances.
- Circled numbers refer to waveforms.
- Signal path.
  - ⇨ : Audio signal (power off)
  - ⇨ : Audio signal (power on)

Note on Printed Wiring Boards:

- o—— : parts extracted from the component side.
- —— : parts extracted from the conductor side.
- ▬ : Pattern from the side which enables seeing.

• Waveforms

– MAIN (R) Board –

① Q15 (Base-1)

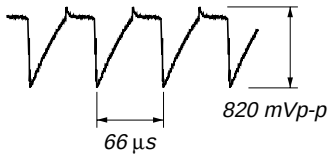

500 mV/DIV, 50 µs/DIV

② Q15 (Base-2)

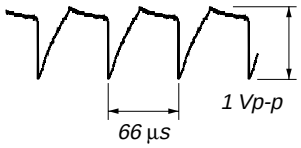

500 mV/DIV, 50 µs/DIV

4-1. PRINTED WIRING BOARDS

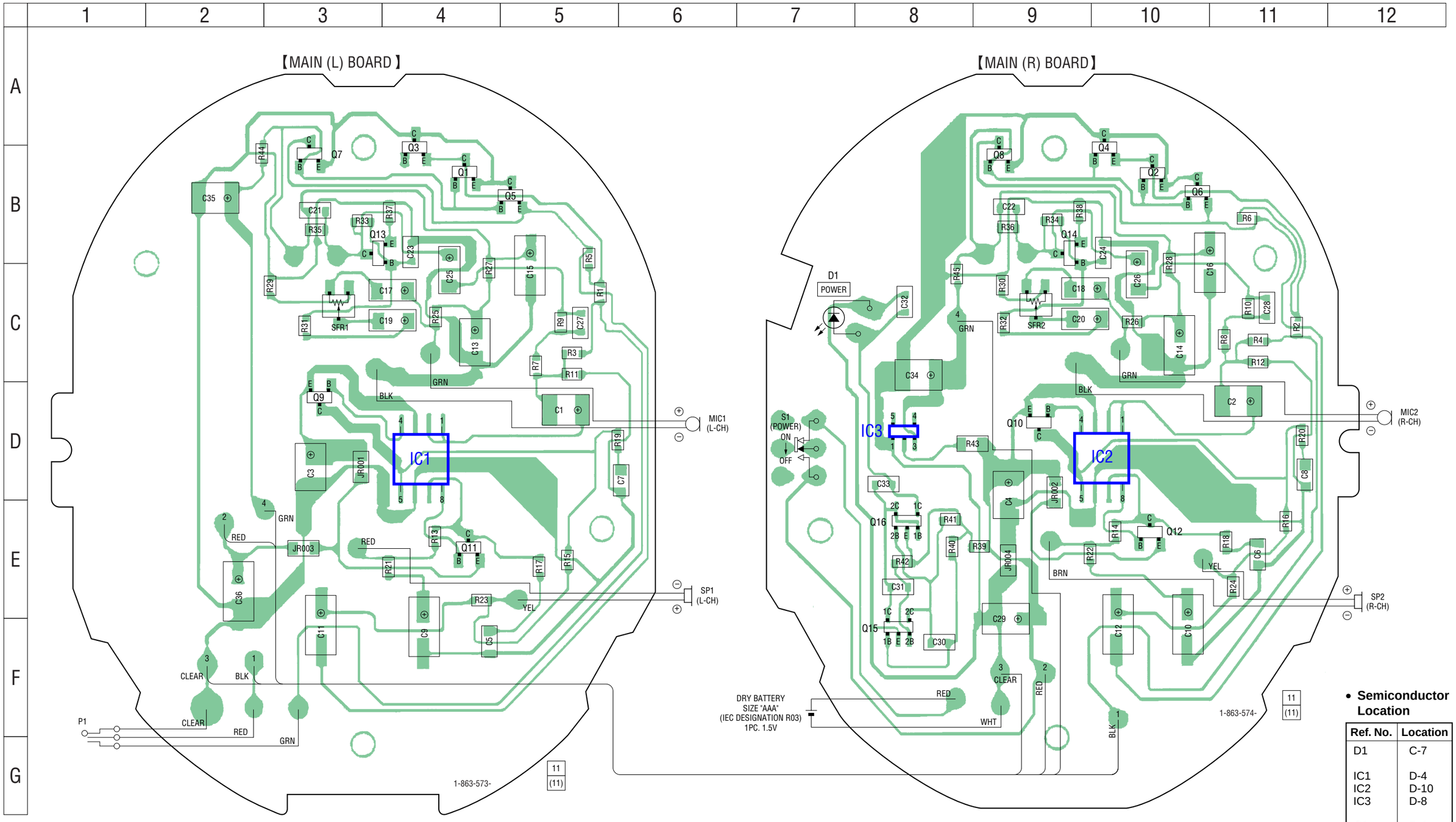

- **Semiconductor Location**

Ref. No.	Location
D1	C-7
IC1	D-4
IC2	D-10
IC3	D-8
Q1	B-4
Q2	B-10
Q3	B-4
Q4	B-10
Q5	B-5
Q6	B-10
Q7	B-3
Q8	B-9
Q9	D-3
Q10	D-9
Q11	E-4
Q12	E-10
Q13	B-3
Q14	B-9
Q15	F-8
Q16	E-8

4-2. SCHEMATIC DIAGRAM BOARD • See page 4 for Waveforms

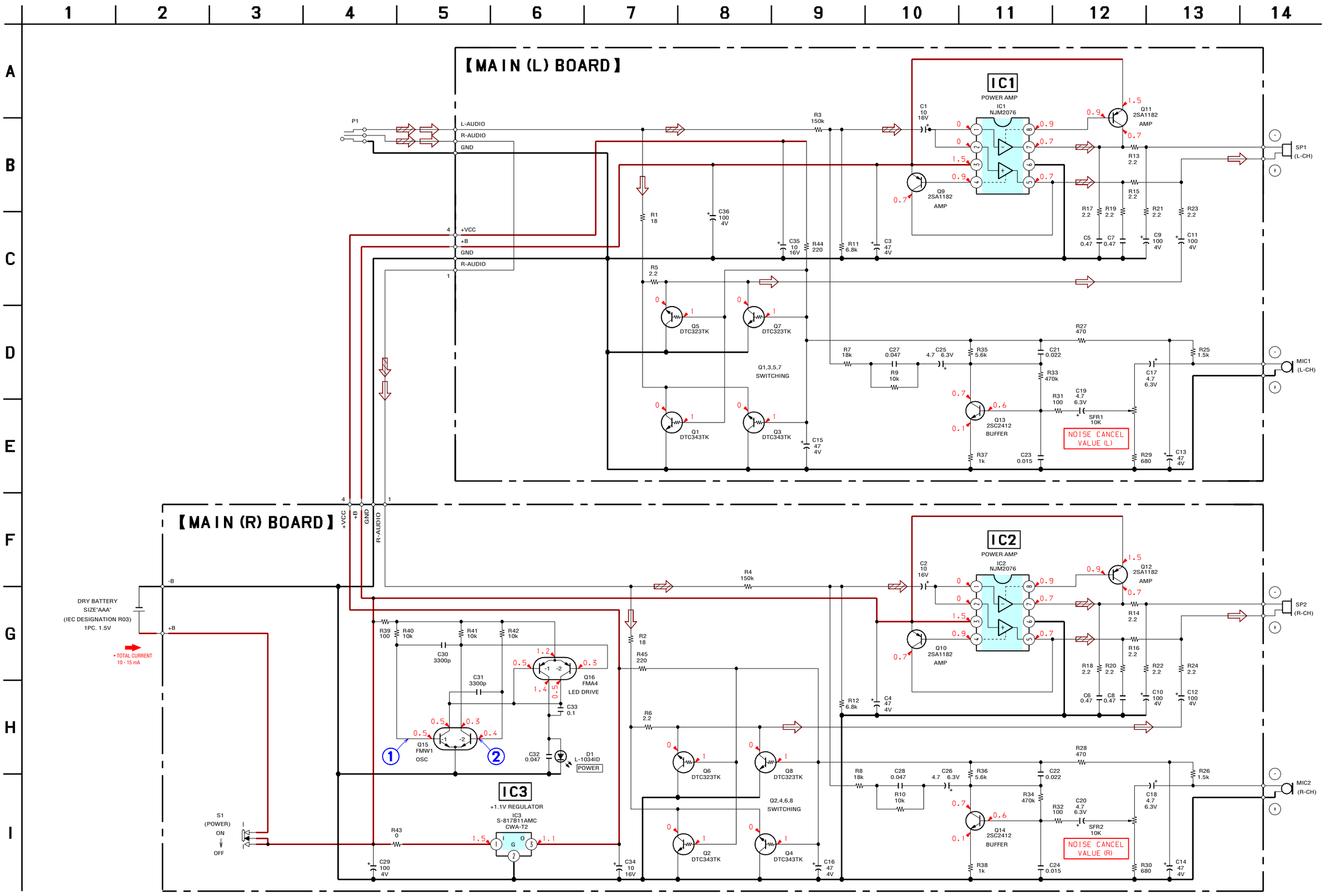

SECTION 5
EXPLODED VIEWS

NOTE:

- -XX and -X mean standardized parts, so they may have some difference from the original one.
- Color Indication of Appearance Parts
  Example:
  KNOB, BALANCE (WHITE) . . . (RED)
  ↑ Parts Color ↑ Cabinet's Color
- Items marked "*" are not stocked since they are seldom required for routine service. Some delay should be anticipated when ordering these items.
- The mechanical parts with no reference number in the exploded views are not supplied.
- Accessories are given in the last of the electrical parts list.

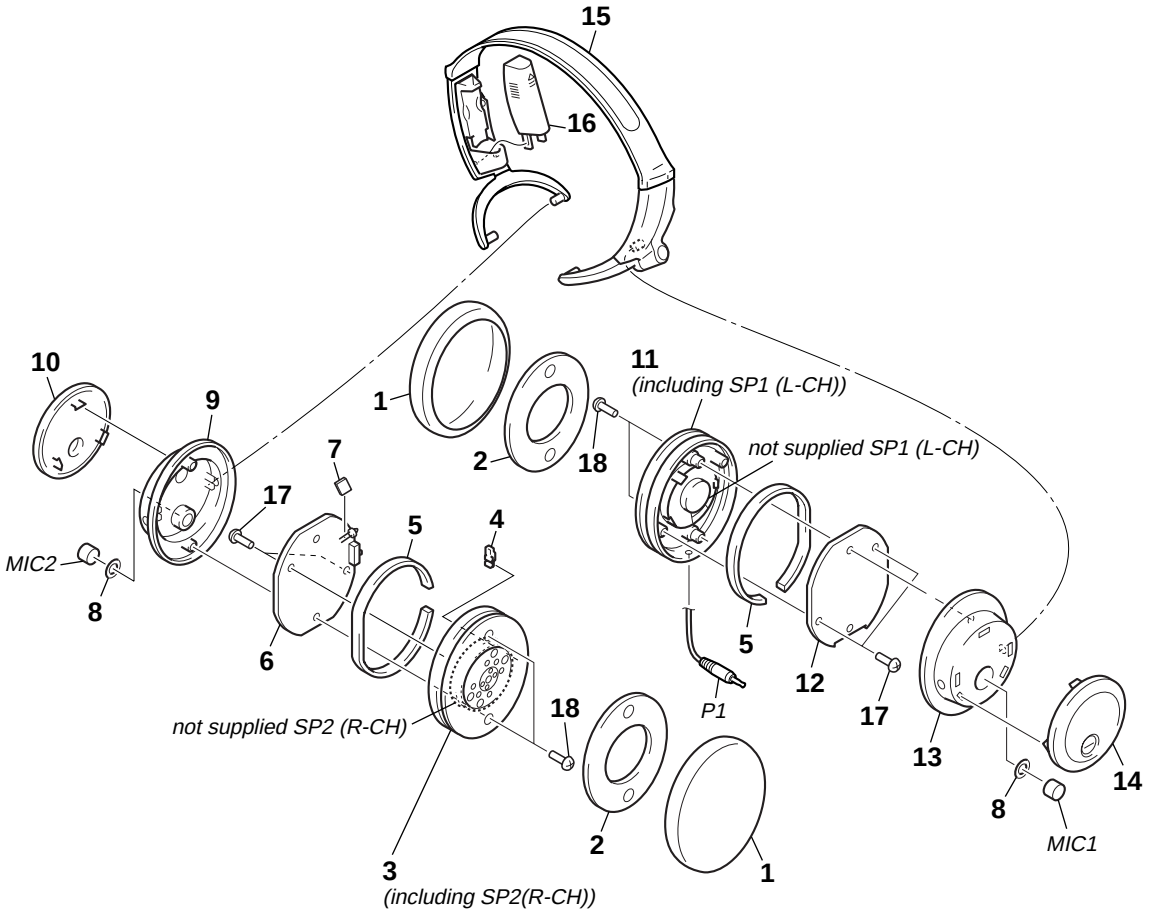

Ref. No.	Part No.	Description	Remark
1	2-148-074-01	PAD, EAR	
2	2-148-072-01	CUSHION, BAFFLE	
3	X-2024-979-1	SUB (R) ASSY, DRIVER UNIT (including SP2 (R-CH))	
4	2-108-838-01	KNOB, SWITCH	
5	2-108-831-01	CUSHION, PC BOARD	
6	A-1066-609-A	MAIN (R) BOARD, COMPLETE	
7	2-148-075-01	CUSHION, LED	
8	2-108-791-01	CUSHION, ECM	
9	2-108-689-01	HOUSING (R)	
10	X-2024-981-1	SUB (R) ASSY, HOUSING CAP	
11	X-2024-980-1	SUB (L) ASSY, DRIVER UNIT (including SP1 (L-CH))	
12	A-1066-608-A	MAIN (L) BOARD, COMPLETE	
13	2-108-688-01	HOUSING (L)	
14	X-2024-982-1	SUB (L) ASSY, HOUSING CAP	
15	X-2024-983-1	BAND SUB ASSY, HEAD	
16	2-108-684-01	LID, BATTERY	
17	2-179-786-01	STOPPER, REAR LID	
18	2-179-785-01	STOPPER, BAFFLE	
MIC1	1-542-260-61	MICROPHONE, ELECTRET, CONDENSER (L-CH)	
MIC2	1-542-260-61	MICROPHONE, ELECTRET, CONDENSER (R-CH)	
P1	1-829-963-11	CORD (WITH PLUG)	

MAIN (L) MAIN (R)

SECTION 6
ELECTRICAL PARTS LIST

NOTE:

- Due to standardization, replacements in the parts list may be different from the parts specified in the diagrams or the components used on the set.
- -XX and -X mean standardized parts, so they may have some difference from the original one.
- RESISTORS
  All resistors are in ohms.
  METAL: Metal-film resistor.
  METAL OXIDE: Metal oxide-film resistor.
  F: nonflammable
- Items marked "*" are not stocked since they are seldom required for routine service.
  Some delay should be anticipated when ordering these items.
- SEMICONDUCTORS
  In each case, u: µ, for example:
  uA... : µA... uPA... : µPA...
  uPB... : µPB... uPC... : µPC...
  uPD... : µPD...
- CAPACITORS
  uF: µF
- COILS
  uH: µH

Ref. No.	Part No.	Description			Remark
	A-1066-608-A	MAIN (L) BOARD, COMPLETE			
		**********			
		< CAPACITOR >			
C1	1-104-913-11	TANTALUM CHIP	10uF	20%	16V
C3	1-113-688-11	ELECT CHIP	47uF	20%	4V
C5	1-107-823-11	CERAMIC CHIP	0.47uF	10%	16V
C7	1-107-823-11	CERAMIC CHIP	0.47uF	10%	16V
C9	1-113-689-11	ELECT CHIP	100uF	20%	4V
C11	1-113-689-11	ELECT CHIP	100uF	20%	4V
C13	1-113-688-11	ELECT CHIP	47uF	20%	4V
C15	1-113-688-11	ELECT CHIP	47uF	20%	4V
C17	1-135-210-11	TANTALUM CHIP	4.7uF	20%	10V
C19	1-135-210-11	TANTALUM CHIP	4.7uF	20%	10V
C21	1-164-227-11	CERAMIC CHIP	0.022uF	10%	25V
C23	1-164-245-11	CERAMIC CHIP	0.015uF	10%	25V
C25	1-135-210-11	TANTALUM CHIP	4.7uF	20%	10V
C27	1-165-176-11	CERAMIC CHIP	0.047uF	10%	16V
C35	1-104-913-11	TANTALUM CHIP	10uF	20%	16V
C36	1-113-689-11	ELECT CHIP	100uF	20%	4V
		< IC >			
IC1	8-759-289-74	IC NJM2076M (TE2)			
		< SHORT >			
JR001	1-216-295-00	SHORT CHIP	0		
JR003	1-216-295-00	SHORT CHIP	0		
		< TRANSISTOR >			
Q1	8-729-920-31	TRANSISTOR	DTC343TK		
Q3	8-729-920-31	TRANSISTOR	DTC343TK		
Q5	8-729-015-39	TRANSISTOR	DTC323TK		
Q7	8-729-015-39	TRANSISTOR	DTC323TK		
Q9	8-729-030-31	TRANSISTOR	2SA1182-0 (TE85R)		
Q11	8-729-030-31	TRANSISTOR	2SA1182-0 (TE85R)		
Q13	8-729-901-81	TRANSISTOR	2SC2412K-T-146-R		
		< RESISTOR >			
R1	1-216-800-11	METAL CHIP	18	5%	1/10W
R3	1-216-847-11	METAL CHIP	150K	5%	1/10W
R5	1-216-789-11	METAL CHIP	2.2	5%	1/10W
R7	1-216-836-11	METAL CHIP	18K	5%	1/10W
R9	1-216-833-11	METAL CHIP	10K	5%	1/10W
R11	1-218-867-11	METAL CHIP	6.8K	0.5%	1/10W
R13	1-216-789-11	METAL CHIP	2.2	5%	1/10W
R15	1-216-789-11	METAL CHIP	2.2	5%	1/10W
R17	1-216-789-11	METAL CHIP	2.2	5%	1/10W
R19	1-216-789-11	METAL CHIP	2.2	5%	1/10W
R21	1-216-789-11	METAL CHIP	2.2	5%	1/10W
R23	1-216-789-11	METAL CHIP	2.2	5%	1/10W
R25	1-216-823-11	METAL CHIP	1.5K	5%	1/10W
R27	1-216-817-11	METAL CHIP	470	5%	1/10W
R29	1-216-819-11	METAL CHIP	680	5%	1/10W
R31	1-216-809-11	METAL CHIP	100	5%	1/10W
R33	1-216-853-11	METAL CHIP	470K	5%	1/10W
R35	1-216-830-11	METAL CHIP	5.6K	5%	1/10W
R37	1-216-821-11	METAL CHIP	1K	5%	1/10W
R44	1-216-813-11	METAL CHIP	220	5%	1/10W
		< VARIABLE RESISTOR >			
SFR1	1-238-090-11	RES, ADJ CERMET	10K		
		**********			
	A-1066-609-A	MAIN (R) BOARD, COMPLETE			
		**********			
		< CAPACITOR >			
C2	1-104-913-11	TANTALUM CHIP	10uF	20%	16V
C4	1-113-688-11	ELECT CHIP	47uF	20%	4V
C6	1-107-823-11	CERAMIC CHIP	0.47uF	10%	16V
C8	1-107-823-11	CERAMIC CHIP	0.47uF	10%	16V
C10	1-113-689-11	ELECT CHIP	100uF	20%	4V
C12	1-113-689-11	ELECT CHIP	100uF	20%	4V
C14	1-113-688-11	ELECT CHIP	47uF	20%	4V
C16	1-113-688-11	ELECT CHIP	47uF	20%	4V
C18	1-135-210-11	TANTALUM CHIP	4.7uF	20%	10V
C20	1-135-210-11	TANTALUM CHIP	4.7uF	20%	10V
C22	1-164-227-11	CERAMIC CHIP	0.022uF	10%	25V
C24	1-164-245-11	CERAMIC CHIP	0.015uF	10%	25V
C26	1-135-210-11	TANTALUM CHIP	4.7uF	20%	10V
C28	1-165-176-11	CERAMIC CHIP	0.047uF	10%	16V
C29	1-113-689-11	ELECT CHIP	100uF	20%	4V
C30	1-162-967-11	CERAMIC CHIP	0.0033uF	10%	50V
C31	1-162-967-11	CERAMIC CHIP	0.0033uF	10%	50V
C32	1-165-176-11	CERAMIC CHIP	0.047uF	10%	16V
C33	1-164-156-11	CERAMIC CHIP	0.1uF		25V
C34	1-104-913-11	TANTALUM CHIP	10uF	20%	16V

Ref. No.	Part No.	Description			Remark
		< LED >			
D1	8-719-060-79	LED L-1034ID (POWER)			
		< IC >			
IC2	8-759-289-74	IC NJM2076M (TE2)			
IC3	6-704-289-01	IC S-817B11AMC-CWAT2G			
		< SHORT >			
JR002	1-216-295-00	SHORT CHIP	0		
JR004	1-216-295-00	SHORT CHIP	0		
		< TRANSISTOR >			
Q2	8-729-920-31	TRANSISTOR	DTC343TK		
Q4	8-729-920-31	TRANSISTOR	DTC343TK		
Q6	8-729-015-39	TRANSISTOR	DTC323TK		
Q8	8-729-015-39	TRANSISTOR	DTC323TK		
Q10	8-729-030-31	TRANSISTOR	2SA1182-0 (TE85R)		
Q12	8-729-030-31	TRANSISTOR	2SA1182-0 (TE85R)		
Q14	8-729-901-81	TRANSISTOR	2SC2412K-T-146-R		
Q15	8-729-903-10	TRANSISTOR	FMW1		
Q16	8-729-902-90	TRANSISTOR	FMA4		
		< RESISTOR >			
R2	1-216-800-11	METAL CHIP	18	5%	1/10W
R4	1-216-847-11	METAL CHIP	150K	5%	1/10W
R6	1-216-789-11	METAL CHIP	2.2	5%	1/10W
R8	1-216-836-11	METAL CHIP	18K	5%	1/10W
R10	1-216-833-11	METAL CHIP	10K	5%	1/10W
R12	1-218-867-11	METAL CHIP	6.8K	0.5%	1/10W
R14	1-216-789-11	METAL CHIP	2.2	5%	1/10W
R16	1-216-789-11	METAL CHIP	2.2	5%	1/10W
R18	1-216-789-11	METAL CHIP	2.2	5%	1/10W
R20	1-216-789-11	METAL CHIP	2.2	5%	1/10W
R22	1-216-789-11	METAL CHIP	2.2	5%	1/10W
R24	1-216-789-11	METAL CHIP	2.2	5%	1/10W
R26	1-216-823-11	METAL CHIP	1.5K	5%	1/10W
R28	1-216-817-11	METAL CHIP	470	5%	1/10W
R30	1-216-819-11	METAL CHIP	680	5%	1/10W
R32	1-216-809-11	METAL CHIP	100	5%	1/10W
R34	1-216-853-11	METAL CHIP	470K	5%	1/10W
R36	1-216-830-11	METAL CHIP	5.6K	5%	1/10W
R38	1-216-821-11	METAL CHIP	1K	5%	1/10W
R39	1-216-816-11	METAL CHIP	390	5%	1/10W
R40	1-216-833-11	METAL CHIP	10K	5%	1/10W
R41	1-216-833-11	METAL CHIP	10K	5%	1/10W
R42	1-216-833-11	METAL CHIP	10K	5%	1/10W
R43	1-216-295-00	SHORT CHIP	0		
R45	1-216-813-11	METAL CHIP	220	5%	1/10W
		< SWITCH >			
S1	(Not supplied)	SWITCH, SLIDE (POWER)			
		< VARIABLE RESISTOR >			
SFR2	1-238-090-11	RES, ADJ CERMET	10K		

****

Ref. No.	Part No.	Description	Remark
		MISCELLANEOUS	
		**********	
3	X-2024-979-1	SUB (R) ASSY, DRIVER UNIT (including SP2 (R-CH))	
11	X-2024-980-1	SUB (L) ASSY, DRIVER UNIT (including SP1 (L-CH))	
MIC1	1-542-260-61	MICROPHONE, ELECTRET, CONDENSER (L-CH)	
MIC2	1-542-260-61	MICROPHONE, ELECTRET, CONDENSER (R-CH)	
P1	1-829-963-11	CORD (WITH PLUG)	

****

		ACCESSORIES
		**********
	1-473-686-11	ADAPTOR, PLUG (DUAL) (for in flight use)
	2-108-830-01	POUCH, CARRYING
	2-149-995-01	MANUAL, INSTRUCTION (JAPANESE)
	2-149-995-11	MANUAL, INSTRUCTION (ENGLISH, FRENCH, SPANISH)

REVISION HISTORY

Clicking the version allows you to jump to the revised page.
Also, clicking the version at the upper right on the revised page allows you to jump to the next revised page.

Ver.	Date	Description of Revision
1.0	2004.10	New

MDR-NC6

SERVICE MANUAL

Ver. 1.1 2005.02

US Model
Canadian Model
AEP Model

- The following parts are available for service parts of this model.

PARTS LIST

Part No.	Description	Remark
1-473-686-11	ADAPTOR, PLUG (DUAL)	
2-108-830-01	POUCH, CARRYING (US)	
2-148-074-01	PAD, EAR	
2-149-995-11	MANUAL, INSTRUCTION (ENGLISH, FRENCH, SPANISH)	(US)
2-589-850-01	MANUAL, INSTRUCTION (ENGLISH, FRENCH, SPANISH, GERMAN, ITALIAN, PORTUGUESE, HUNGARIAN, POLISH, CZECH, RUSSIAN, SLOVAKIAN) (Canadian, AEP)	

STEREO HEADPHONES

9-879-145-02
2005B05-1
© 2005.02

Sony Corporation
Personal Audio Company
Published by Sony Engineering Corporation

SONY®

REVISION HISTORY

Clicking the version allows you to jump to the revised page.
Also, clicking the version at the upper right on the revised page allows you to jump to the next revised page.

Ver.	Date	Description of Revision
1.0	2004.08	New
1.1	2005.02	Addition of Canadian and AEP models